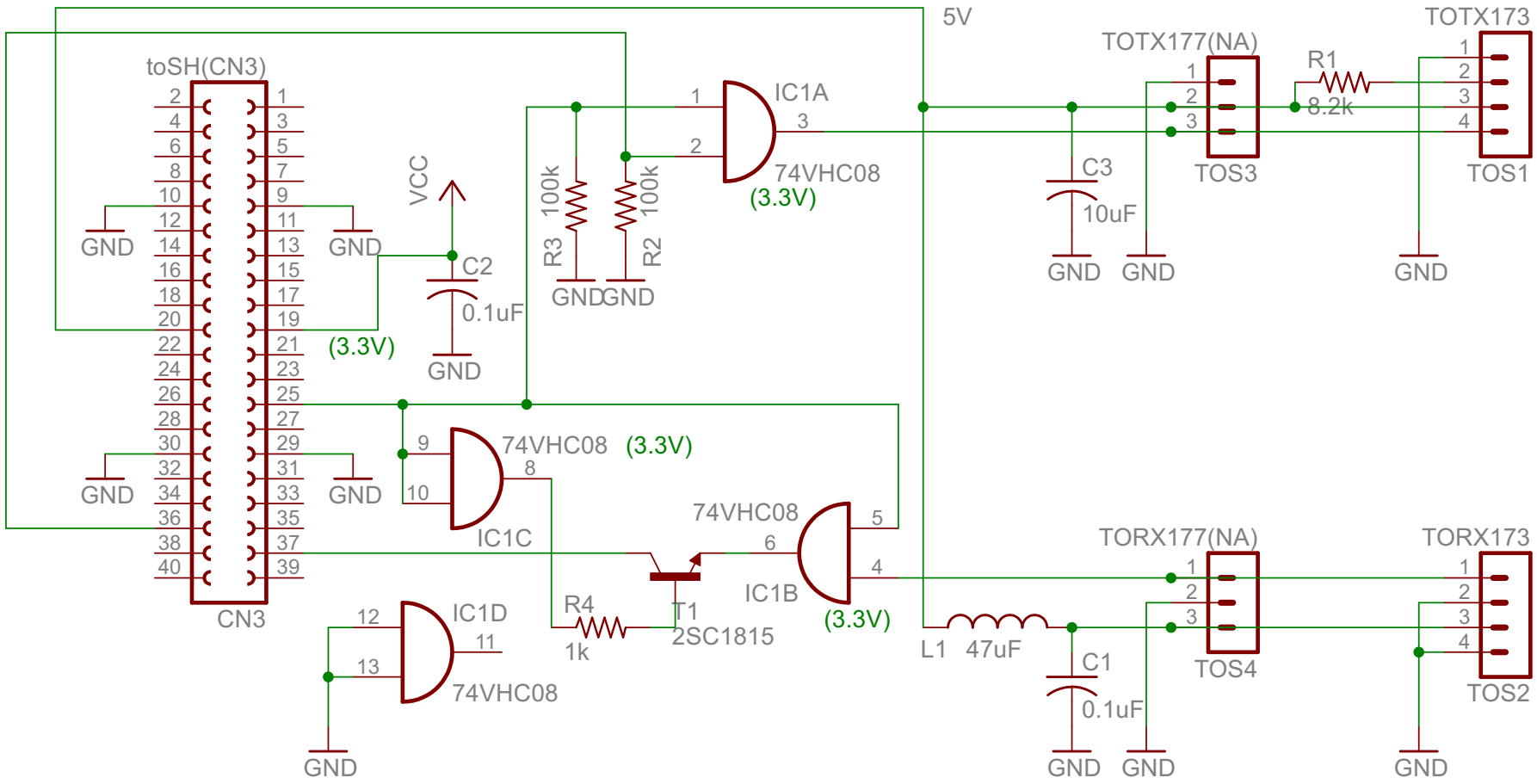
5V
toSH(CN3)
CN3
GND
(3.3V)
VCC
C2
0.1uF
R3 100k
R2 100k
IC1A
74VHC08
(3.3V)
IC1C
IC1D
IC1B
T1
2SC1815
R4
1k
L1 47uF
C1
0.1uF
C3
10uF
TOTX177(NA)
TOS3
R1
8.2k
TOTX173
TOS1
TORX177(NA)
TOS4
TORX173
TOS2