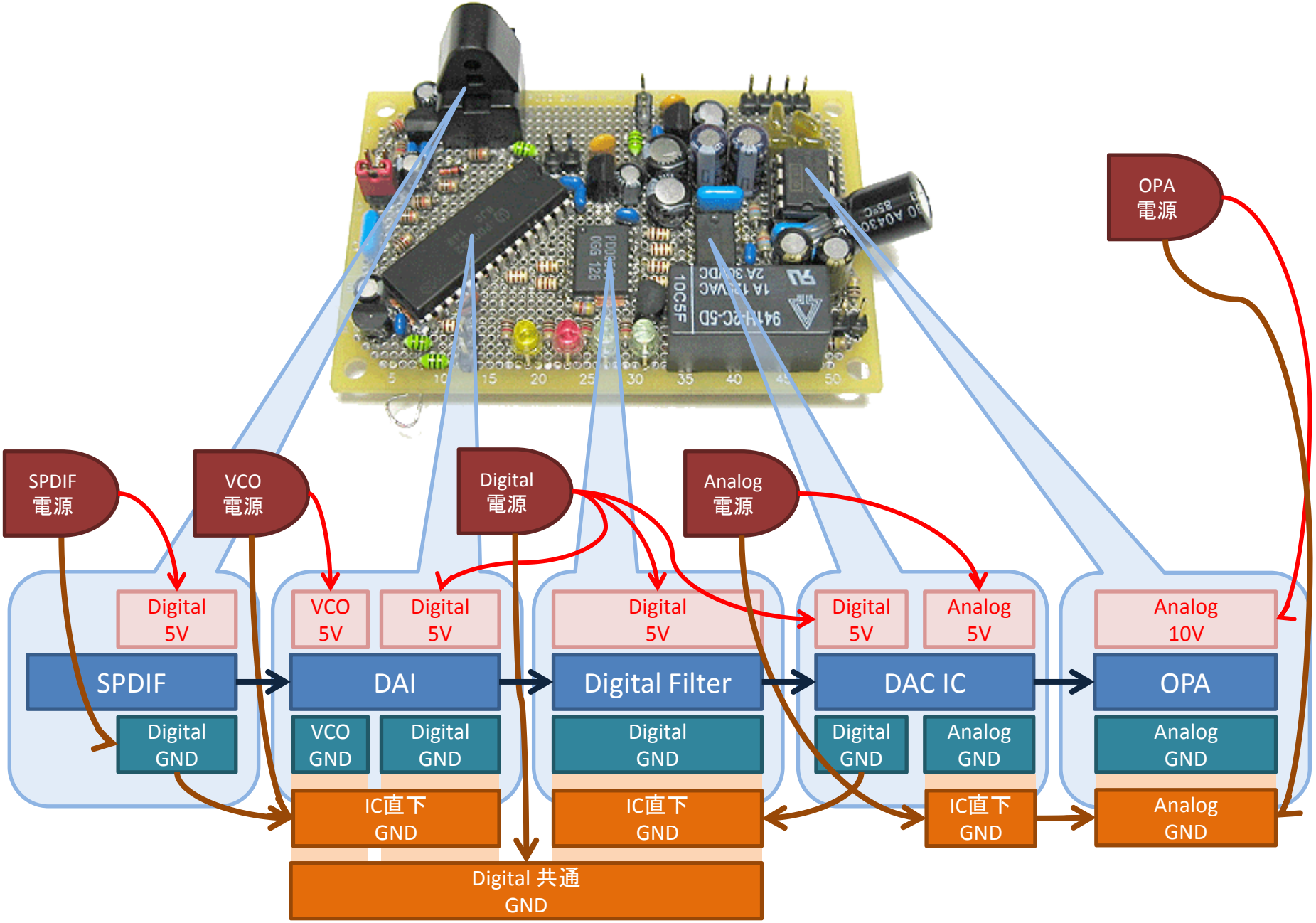
SPDIF
電源
VCO
電源
Digital
電源
Analog
電源
OPA
電源
Digital
5V
VCO
5V
Digital
5V
Digital
5V
Digital
5V
Analog
5V
Analog
10V
SPDIF
DAI
Digital Filter
DAC IC
OPA
Digital
GND
VCO
GND
Digital
GND
Digital
GND
Digital
GND
Analog
GND
Analog
GND
IC直下
GND
IC直下
GND
IC直下
GND
Analog
GND
Digital 共通
GND